MAGPRO 35 Adjust 2s

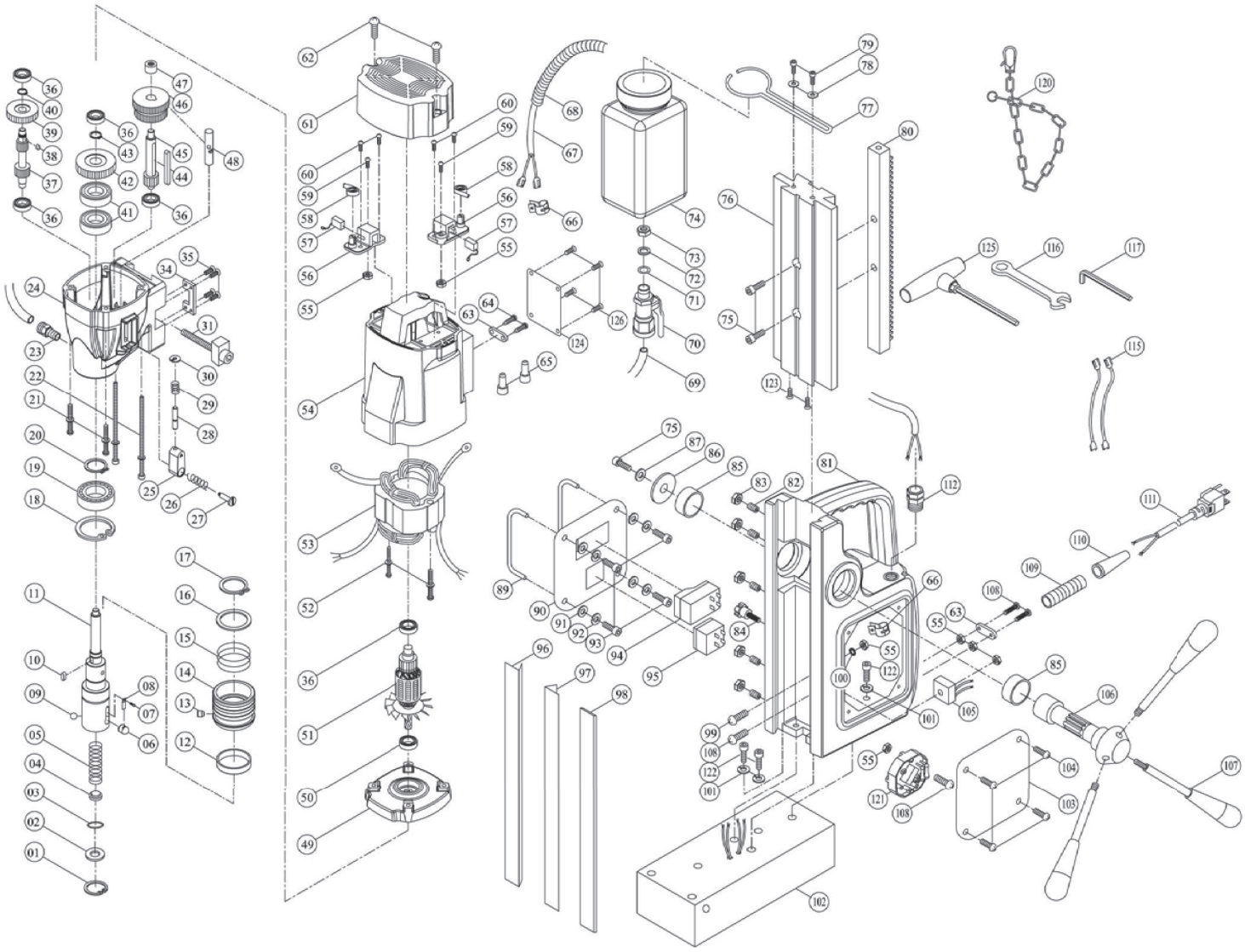

MagPro 35 Adj 2S | 490150 2

JEPSON POWER GERMANY
Leading Through Innovation

ITEM	PART NO	Q'TY	PART NAME		Price in € excl. VAT
1.)	MA351S001	1	INTERNAL CIRCLIP	R-19	0.60 €
2.)	MA351S002	1	ARBOR WASHER	ϕ10 x ϕ18.5 x 0.8	0.60 €
3.)	MA351S003	1	O-RING	12 x 4	0.60 €
4.)	MA351S004	1	COOLANT SEAL	ϕ12 x ϕ10.2 x 15	2.30 €
5.)	MA351S005	1	SPRING	ϕ1.2 x ϕ10.1 x ϕ12.5 :	1.20 €
6.)	MA351S006	1	LOCKING PIN	12.3mm	7.90 €
7.)	MA351S007	1	SET SCREW	M3 x 4	0.60 €
8.)	MA351S008	1	LOCKING PIN SPRING		1.70 €
9.)	MA351S009	1	CHECK BALL	ϕ8	1.20 €
10.)	MA351S010	1	PARALLEL KEY	M5 x 5 x 10	1.70 €
11.)	MA352S11	1	SPINDLE	MA 35 2 Speed	133.70 €
12.)	MA351S012	1	RING	ϕ40 x ϕ44 x 9	1.70 €
13.)	MA351S013	1	COLLAR PIN		3.40 €
14.)	MA351S014	1	QUICK-RELEASE COLLAR		53.90 €
15.)	MA351S015	1	SPRING	ϕ39 x ϕ43 x 3T x 30L	1.70 €
16.)	MA351S016	1	SPRING SEAT RING	ϕ35.1 x ϕ44.5 x 2	3.40 €
17.)	MA351S017	1	EXTERNAL CIRCLIP	S-35	0.60 €
18.)	MA351S018	1	INTERNAL CIRCLIP	R-47	1.20 €
19.)	MA351S019	1	BEARING	6005 zz	30.40 €
20.)	MA351S20	1	EXTERNAL CIRCLIP	S-25	0.60 €
21.)	MA352S21	1	SCREW	M5 x 65	0.60 €
22.)	MA352S22	1	SCREW	M5 x 110	1.70 €
23.)	MA351S023	1	COOLANT CONNECTOR		4.50 €
24.)	MA352S24	1	GEAR CASE	MA35 2 Speed	146.00 €
25.)	MA352S25	1	SELECTOR TAB		5.70 €
26.)	MA352S26	1	SPRING	ϕ9 x ϕ11 x 4T	0.60 €
27.)	MA352S27	1	SHOULDER SCREW		6.20 €
28.)	MA352S28	1	DETENT PIN		2.30 €
29.)	MA352S29	1	SPRING	ψ5.3 x ψ6.5 x 5T x 17l	0.60 €
30.)	MA352S30	1	E-CLIP	E-3	0.60 €
31.)	MA352S31	1	SLIDE HEIGHT LOCK		50.60 €
34.)	MA351S034	1	LOCK BRACKET		4.50 €
35.)	MA351S035	4	SCREW	M4 x 10	0.60 €
36.)	MA351S036	5	BEARING	608 ZZ	7.30 €
37.)	MA352S37	1	MAINSHAFT PINION	M1.0 x 12T & 17T	47.20 €
38.)	MA352S38	1	PARALLEL KEY	M4 x 4 x 8	1.20 €
39.)	MA351S039	1	INPUT GEAR	M1.0 x 36T	32.00 €
40.)	MA351S040	1	EXTERNAL CIRCLIP	S-10	0.60 €
41.)	MA351S041	2	OIL SEAL	ϕ25 x ϕ40 x 7	2.90 €
42.)	MA351S042	1	OUTPUT GEAR	M1.25 x 37T	34.30 €
43.)	MA351S043	1	EXTERNAL CIRCLIP	S-15	0.60 €
44.)	MA352S44	1	PARALLEL KEY	M5 x 5 x 50	2.30 €
45.)	MA352S45	1	INTERMEDIATE GEAR PINION	M1.25 x 12T	33.20 €
46.)	MA352S46	1	INTERMEDIATE GEAR	M1.0 x 45T & 40T	74.10 €
47.)	MA351S047	1	NEEDLE BEARING	0810 ϕ8 x ϕ15 x 10	6.20 €
48.)	MA352S48	1	SELECTOR FORK		11.30 €
49.)	MA351S049	1	GEAR PLATE		39.30 €
50.)	MA351S050	1	BEARING	6001 2RU	19.70 €
51.)	MA351S051	1	ARMATURE	220V	108.40 €
52.)	MA351S052	2	SCREW	M5 x 60	0.60 €
53.)	MA351S053	1	STATOR	220V	67.40 €
54.)	MA351S054	1	MOTOR HOUSING		35.40 €
55.)	MA351S055	7	NUT	M4	0.60 €
56.)	MA351S056	2	BRUSH HOLDER		7.90 €
57.)	MA3532	1	CARBON BRUSH SET	7 x 11	23.10 €
61.)	MA352S61	1	MOTOR TAIL COVER	MA35 2 Speed	5.10 €
62.)	MA351S062	4	SCREW	M5x12	0.60 €
63.)	MA351S063	2	CABLE CLIP		0.60 €
64.)	MA351S064	2	SCREW	M4 x 14	0.60 €
65.)	MA351S065	2	WIRE CONNECTOR	C4	0.60 €
66.)	MA351S066	2	CABLE CLAMP		1.20 €
67.)	MA351S67	1	MOTOR CABLE	1.0x2Cx65cm	6.80 €

MagPro 35 Adj 2S | 490150 2

JEPSON POWER GERMANY
Leading Through Innovation

68.)	MA351S68	1	CABLE PROTECTOR	40cm	2.90 €
69.)	MA351S69	1	COOLANT TUBE	20cm	0.60 €
70-74.)	MA3547SET	1	COOLANT TANK		27.00 €
75.)	MA351S075	3	CAP BOLT	M6 x 16	0.60 €
76.)	MA351S076	1	SLIDE		107.30 €
77.)	MA3546	1	COOLANT TANK BRACKET		3.40 €
78.)	MA3545	2	FLAT WASHER	M5	0.60 €
79.)	MA351S79	2	SOCKET CAP SCREW	M5 x 16	0.60 €
80.)	MA351S080	1	GEAR RACK		19.10 €
81.)	MA351S081	1	STAND BODY		264.90 €
82.)	MA351S082	5	GIB SET SCREW	M5 x 20	0.60 €
83.)	MA351S083	5	GIB LOCK NUT	M5	0.60 €
84.)	MA351S084	1	THUMB SCREW	M5 x 16	2.90 €
85.)	MA351S085	2	BUSHING	ψ32 x ψ28 x 12	1.70 €
86.)	MA351S086	1	FLAT WASHER	ψ40 x ψ6 x 2.5	1.20 €
87.)	MA351S087	1	FLAT WASHER	ψ6 x ψ25 x 1	0.60 €
89.)	MA351S089	2	SWITCH GUARD BAR		6.80 €
90.)	MA351S090	1	SWITCH PANEL		5.10 €
91.)	MA351S091	7	FLAT WASHER	M4	0.60 €
92.)	MA351S092	4	SPRING WASHER	M4	0.60 €
93.)	MA351S093	4	SCREW	M4 x 16	0.60 €
94.)	MA3559	1	MOTOR SWITCH		51.10 €
95.)	MA3560	1	MAGNET SWITCH		8.50 €
96.)	MA351S096	1	GIB STRIP - LEFT		13.50 €
97.)	MA351S097	1	GIB STRIP - RIGHT		13.50 €
98.)	MA351S098	1	GIB TENSIONER	260 x 11 x 2.3	3.40 €
99.)	MA351S099	1	SCREW	M4 x 16	0.60 €
100.)	MA351S100	1	SUN WASHER	M5	0.60 €
101.)	MA351S101	3	SPRING WASHER	M6	0.60 €
102.)	MA351S102	1	MAGNET BASE	176x90x55.5	344.10 €
103.)	MA351S103	1	SIDE PANEL		5.70 €
104.)	MA351S104	4	SCREW	M4 x 8	0.60 €
105.)	MA351S105	1	RECTIFIER & EMC	220V	39.90 €
106.)	MA351S106	1	CRANK SPINDLE		64.00 €
107.)	MA351S107	3	CRANK HANDLE		12.40 €
108.)	MA351S108	4	SCREW	M4 x 30	0.60 €
109.)	MA351S109	1	STRAIN RELIEF		0.60 €
110.)	MA351S110	1	CORD ARMOR		0.60 €
111.)	MA3586	1	POWER SUPPLY CABLE	1.0 x 3C x 2.5M	27.00 €
112.)	MA351S112	1	CABLE GLAND		7.90 €
114.)	MA351S114	2	LEAD WIRE	YELLOW	1.70 €
115.)	MA351S115	4	LEAD WIRE	BLACK	1.70 €
116.)	MA351S116	1	WRENCH	M8	4.50 €
117.)	MA351S117	1	L-HEX KEY	M2.5	0.60 €
118.)	MA351S118	1	L-HEX KEY	M4	0.60 €
120.)	MA351S120	1	SAFETY CHAIN		15.20 €
121.)	MA351S121	1	OVERLOAD UNIT	220V	73.00 €
122.)	MA351S122	3	CAP BOLT	M6 x 20	0.60 €
123.)	MA351S123	2	PAN HEAD SCREW	M4 x 6	0.60 €
124.)	MA351S124	1	MOTOR COVER PLATE		13.50 €
125.)	MA351S125	1	T-HANDLE HEX KEY	M6	6.80 €
126.)	MA351S126	4	SCREW	M4 x 8	0.60 €
127.)	MA351S127	1	RUBBER WASHER	M4	0.60 €
128.)	MA351S128	4	TERMINALS		0.60 €
129.)	MA351S129	3	SCREW	M4 x 25	0.60 €
130.)	MA351S130	1	STRAP		0.60 €
131.)	MA351S131	8	Cable Clip		0.60 €
132.)	MA351S132	1	CHIP GUARD KIT		5.70 €
133.)	MA351S133	2	WASHER	ψ6 x ψ13 x 1	0.60 €
134.)	MA351S134	2	SCREW	M6 x 10	2.30 €
135.)	MA351S135	2	BRUSH CAP	7 x 11	1.20 €
136.)	MA351S136	1	CABLE CLIP		0.60 €
136.)	MA35111	1	Earthing Marking		0.60 €